SEDAC

SMART ENERGY DESIGN ASSISTANCE CENTER

Providing effective energy strategies for buildings and communities

2018 IECC Commercial Lighting

04.30.2019

Who we are

We assist buildings and communities in achieving energy efficiency, saving money, and becoming more sustainable.

We are an applied research program at University of Illinois, working in collaboration with 360 Energy Group.

Our goal: Reduce the energy footprint of Illinois.

SEDAC is the Illinois Energy Conservation Code Training Provider

This training program is sponsored by Illinois EPA

Office of Energy

Energy Code Assistance

- Technical support
  - 800.214.7954
  - energycode@sedac.org
- Online resources at sedac.org/energy-code
- Workshops
- Webinars
- Online on-demand training modules

www.sedac.org/energy-code

EVENTS | ABOUT SEDAC | REQUEST SERVICES

SEDAC
SMART ENERGY DESIGN ASSISTANCE CENTER

SAVE ENERGY & MONEY | EXPERTISE | EDUCATION & OUTREACH | RESOURCES | ENERGY CODE TRAINING

Energy Code Training

- Illinois Energy Conservation Code
- Workshops
- Webinars
- Online training
- Resources
- Frequently Asked Questions
- Contact us

Energy Code Training

SEDAC is the Illinois Energy Conservation Code training provider

The Smart Energy Design Assistance Center (SEDAC), in partnership with the Illinois EPA Office of Energy, provides training to increase awareness of the Illinois Energy Conservation Code and to improve the energy efficiency of new construction and renovation in Illinois. Community code officials, construction professionals and trades, and design professionals such as architects and engineers are invited to participate. SEDAC offers workshops, webinars, online training, resources, and technical support.

Funding provided in whole or in part by the Illinois EPA Office of Energy.

Smart Energy Design Assistance Center
University of Illinois
1 St Mary's Road | Champaign, IL 61820
800.214.7954 | info@sedac.org

Department of LANDSCAPE ARCHITECTURE

360 Energy Group

CONTACT | NEWSLETTER

Illinois Energy Conservation Code

Anticipated adoption date of 2018 IECC: June 1, 2019

In accordance with the **Energy Efficient Building Act**, the **Capital Development Board** (CDB) is required to review and adopt the most current version of the International Energy Conservation Code (IECC) within one year of its publication date. The Code will then become effective in Illinois within 6 months following its adoption by the CDB.

The CDB, in conjunction with the **Illinois Environmental Protection Agency** and the **Illinois Energy Conservation Advisory Council**, has initiated the cycle for the Illinois Energy Conservation Code to update from the 2015 IECC to the 2018 IECC. It is anticipated at this time that the updated Illinois Energy Conservation Code based on the 2018 IECC and Illinois Amendments will be effective on **June 1, 2019**.

You can access the 2018 IECC **here** and learn about the 2018 IECC updates in SEDAC's workshops and webinars.

The current Illinois Energy Code is based on the 2015 IECC, with Illinois amendments

The CDB, in conjunction with the **Department of Commerce & Economic Opportunity** (DCEO), updated the 2012 IECC to the 2015 IECC, and the 2015 IECC, with **Illinois Amendments**, became law in the State of Illinois on January 1, 2016.

On July 1, 2017, Illinois Executive Order 17-03 transferred responsibility for the Illinois Energy Conservation Code from the Illinois Department of Commerce and Economic Opportunity to the **Illinois Environmental Protection Agency** (IEPA).

Access to 2018 IECC

https://codes.iccsafe.org/public/document/iecc2018

Search product titles | Experience the ICC premiumACCESS™ Demo | ICC Home | cdpACCESS | Store | premiumACCESS™ | publicACCESS™

ICC INTERNATIONAL CODE COUNCIL | Browse | Category | Year | Help | Sign In

Home / I-Codes

2018 International Energy Conservation Code

Enable Premium Features

This title is available for premiumACCESS. Click to purchase a premium subscription to this content.

TABLE OF CONTENTS

Table Of Contents

2018 IECC C405 Lighting

- **Mandatory Provisions**
  - C405.1 General
  - C405.2 Lighting Controls
  - C405.4 Exterior Lighting Power Requirements

2018 IECC C405 Lighting

- **Major Highlights**
  - Reduced Lighting Power Allowances
  - New Choice of Luminaire-Level Lighting Controls (LLLC)
  - Broadened Mandatory Control Requirements
  - Interior Automatic Lighting Shutoff
  - Manual Override Switches
  - Daylight-Responsive Interior Lighting Controls
  - Special Applications
  - Exterior Lighting Control
  - Clarifications

2018 IECC Other Lighting Requirements

- **Major Highlights**

Additional Energy Efficiency Options:

- C406.3 Reduced Lighting Power: < 90%

- C406.4 Enhanced Digital Lighting Controls:
  - Luminaires configured for continuous dimming
  - Luminaires addressed individually or ≤ 4 luminaires
  - ≤ 8 luminaires be controlled together in a daylight zone
  - Controlled through a digital control system
  - CD to include a Sequence of Operation
  - Functional testing to comply with C408

2018 IECC Other Lighting Requirements

- **Major Highlights**
  - C408.3 Functional Testing of Lighting Controls
    - Prior to passing final inspection, registered design professional shall provide evidence that lighting controls have been tested to ensure that control hardware & software are calibrated, adjusted, programmed and in proper working condition in accordance with the construction documents & manufacturer's instruction.
    - Documentation Requirements: Construction documents shall specify that Drawings (location & catalogue # of each equipment), Manuals & Report are provided to the owner within 90 days of the receipt of Certificate of Occupancy

IECC 2018
Section 405
Lighting Systems

C405.1 General

Dwelling Units within Multi-family Buildings

- R404.1

All Other Dwelling Units

- R404.1
- or C405.2.4 & C405.3

Sleeping Units

- C405.2.4 & R404.1
- or C405.2.4 & C405.3

R404.1: High-efficacy Lights

C405.2.4: Specific App Control

C405.3: Interior LP Requirements

2018 IECC R404 Electrical & Lighting

- **R404.1 Lighting Equipment (Mandatory)**
  - Not less than 90% of the permanently installed lighting fixtures shall contain only high-efficacy lamps*.
- **R404.1.1 Lighting Equipment (Mandatory)**
  - Fuel gas lighting systems shall not have continuous burning pilot lights.
- *** High-Efficacy Lamps:**
  - 60 lm/W for lamps > 40W
  - 50 lm/W for lamps 15 – 40W
  - 40 lm/W for lamps ≤ 15W

IL Amendments:

Fixtures ≥ 55 lm/W

Lamps ≥ 65 lm/W

C405.2 Lighting Controls

C405.2 Lighting Control
(Choose one)

Lighting Controls

C405.2.1

C405.2.2

C405.2.3

C405.2.4

C405.2.5

C405.2.6

LLLC

C405.2.1

C405.2.4

C405.2.5

C405.2.1:
Occupancy Control

C405.2.2:
Time-switch Control

C405.2.3:
Daylight Control

C405.2.4:
Specific App Control

C405.2.5:
Manual Control

C405.2.6:
Exterior Lighting Control

Image courtesy of Cree

C405.2 Lighting Controls

C405.2 Lighting Control
(Choose one)

Lighting Controls
C405.2.1
C405.2.2
C405.2.3
C405.2.4
C405.2.5
C405.2.6

LLLC
C405.2.1
C405.2.4
C405.2.5

LLLC shall independently capable of:

- Monitoring occupancy to brighten or dim lighting
- Monitoring electric & daylight to brighten or dim electric lights
- Configuration & reconfiguration of performance parameters (dim setpoints, timeouts, wireless zoning…)

C405.2.1
Occupant Sensor Controls

C405.2.1 Occupant Sensor Controls

- **Required at**
  - Classrooms/lecture/training rooms
  - Conference/meeting/multipurpose rooms
  - Copy/print rooms
  - Lounges/breakrooms
  - Enclosed offices
  - Open plan office areas
  - Restrooms
  - Storage rooms
  - Locker rooms
  - Other spaces 300 sf or less that are enclosed by floor-to-ceiling height partitions
  - Warehouse storage areas

C405.2.1.2 Occupant Sensor Cntrl Function in *Warehouse*

- Must reduce lighting power by at least 50% when unoccupied.
- Controls must cover aisleways and open areas. Control for each aisleway shall be independent and shall not control beyond the aisleway.

Image from http://luxreview.com

C405.2.1.2 Occupant Sensor Cntrl Function in *Open Plan Offices (≥ 300 sf)*

- Zones limited to 600 sf
- Turn off general lights in all zones within 20 minutes of occupants leaving
- Must reduce lighting power by at least 80% in a reasonably uniform pattern within 20 minutes after no occupancy
- Daylight responsive controls may activate fixtures only if occupants present

Image from https://www.focalpointlights.com

C405.2.1.2 Occupant Sensor Cntrl Function in *Other Areas*

- Auto-off within 20 minutes of occupants leaving
- Manual on or can be auto-on if not more than 50% power
  - Exception: Full auto-on permitted in *public corridors, stairways, restrooms, primary building entrance areas and lobbies, and areas where manual-on operation would endanger the safety or security of the room or building occupants*.
- Shall incorporate manual control to allow occupants to turn lights off

Image from https://lightingcontrolsassociation.org

C405.2.2
Time-switch Controls

Image courtesy of Intermatic

C405.2.2 Time-switch Controls

- **Required at**
  - Areas without occupancy sensor controls

  - Exception:

    Areas with a manual control (C405.2.2.2) where
    - Patient care is directly provided
    - Automatic shutoff would endanger occupant safety or security
    - Lighting is intended for continuous operation
    - In shop and laboratory classrooms

C405.2.2.1 Time-switch Cntrl Functions

- **Each space with time-switch controls shall be provided with a manual control for light reduction in accordance with C405.2.2.2.**

- **Time-switch controls shall complies with following:**
  - Have a min. 7-day clock & capable of 7 daily schedule
  - Holiday shutoff (skip schedule for 24 hrs)
  - Program backup for at least 10 hrs if power is disrupted
  - Have override switch:
    - Shall be manual
    - Override for max. of 2 hrs
    - Individual override switch may not cover more than 5,000 sf

C405.2.2.2 Light-reduction Controls

- **Manual Controls**
  - Allows occupants to reduce lighting by at least 50% in reasonably uniform pattern:
    - Control all lamps or luminaires
    - Dual switching of alternate rows of luminaires, alternate luminaires, or alternate lamps
    - Switching of middle lamp luminaires independent of the outer lamps
    - Switching each luminaire or each lamp

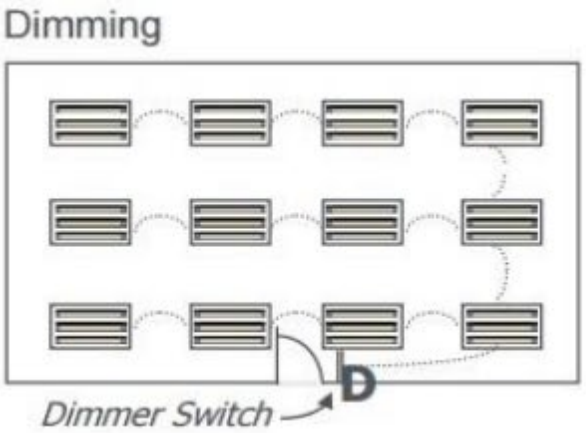

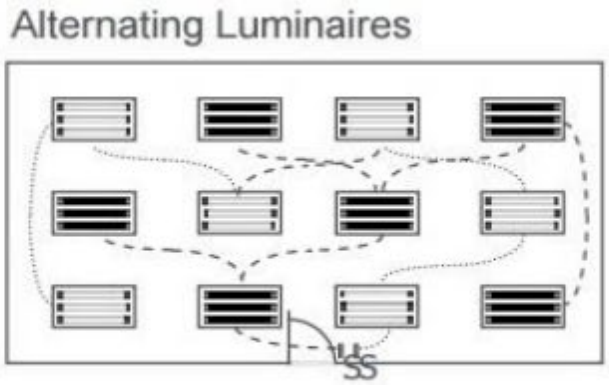

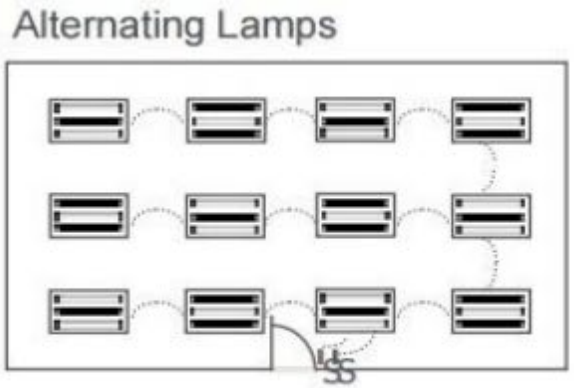

C405.2.3
Daylight-responsive Controls

C405.2.3 Daylight Controls

- **Required in the following spaces:**
  - > 150 W of general lighting within sidelit zones
  - > 150 W of general lighting within toplit zones

- **Exceptions:**
  - Health care facilities where patient care is directly provided
  - Lighting required for specific application control per C405.2.4
  - Sidelit zones on 1st floor above grade in Group A-2 (assembly uses for food/drink) and Group M (mercantile) occupancies
  - New bldg with **TCLP ≤ LPA adj**

C405.2.3 Daylight Controls

- **TCLP (Total Connected Lighting Power)**

  = LVL + BLL + LED + TRK + Other

Where:

LVL = Rated W of luminaires (max. W installed) for line voltage lamps

BLL = Rated input W of ballast or transformers for luminaires incorporating ballasts or transformer

LED = Rated W of LEDs with drivers

TRK = one of the following for track systems:

W of luminaires but not less than 8 W per linear ft

W limit of other permanent current-limiting devices

W limit of the transformer

Other = W of all other not covered previously

C405.2.3 Daylight Controls

- **LPA adj (Adjusted Interior Lighting Power Allowance)**

  = LPA norm x (1.0 – 0.4 x UDZFA / TBFA)

Where:

LPA norm = Normal Interior Lighting Power Allowance (C405.3.2)
UDZFA = Uncontrolled Daylight Zone Floor Area
TBFA = Total Building Floor Area included in the LPA calc

C405.2.3 Daylight Controls

- **LPA adj Exception**
  - 40% less than the normal power allowance for daylit areas

Example Office 1:
200,000 sf total area
100,000 sf daylit zones
LPD: 0.79 W/sf
LPA: 158,000 W

LPA adj
= 158,000 W x (1.0 – 0.4x100,000/200,000)
= 158,000 W x 0.8
= 126,400 W (20% less)

Example Office 2:
200,000 sf total area
50,000 sf daylit zones
LPD: 0.79 W/sf
LPA: 158,000 W

LPA adj
= 158,000 W x (1.0 – 0.4x50,000/200,000)
= 158,000 W x 0.9
= 142,200 W (10% less)

C405.2.3.1 Daylight Control Functions

- Toplit zones to be controlled independently of sidelit zones
- Be configured to be calibrated from within the space
- Calibration mechanism to be in a location with ready access
- Dim continuously from full to ≤ 15% in offices, classrooms, labs & library reading rooms
- Configured to completely shut off all lights
- Sidelit zones facing different cardinal orientations to be controlled independently

  Exception: < 150 W in each space can be controlled together

C405.2.3.2 Sidelit Zones

- Floor area adjacent to vertical fenestration
- Area of fenestration ≥ 24 sf
- Visible Transmittance ≥ 0.20

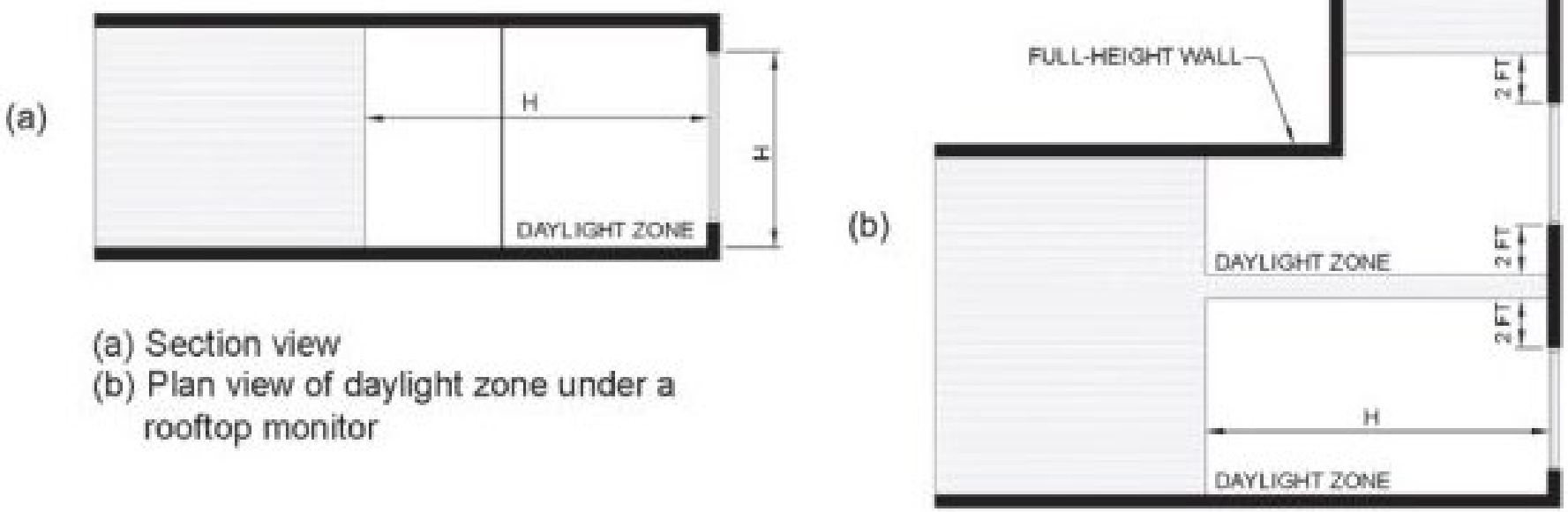

(a) Section view
(b) Plan view of daylight zone under a rooftop monitor

FIGURE C405.2.3.2
SIDELIT ZONE

C405.2.3.2 Sidelit Zones

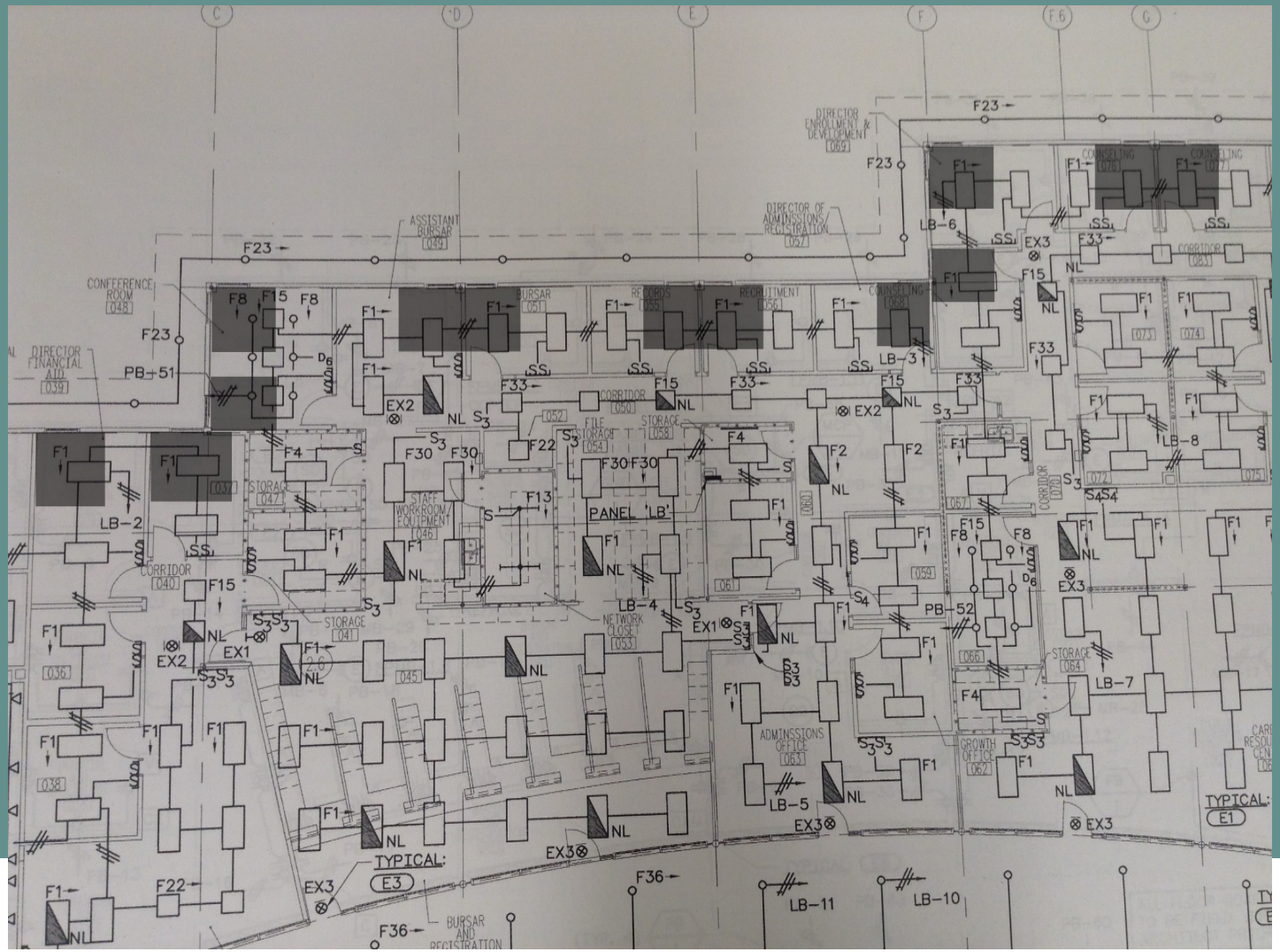

C405.2.3.3 Toplit Zones

- Floor area underneath a roof fenestration
- No buildings block direct sunlight hitting the fenestration at the peak solar angle
- (VT x area of roof opening) / toplit zone area ≥ 0.008

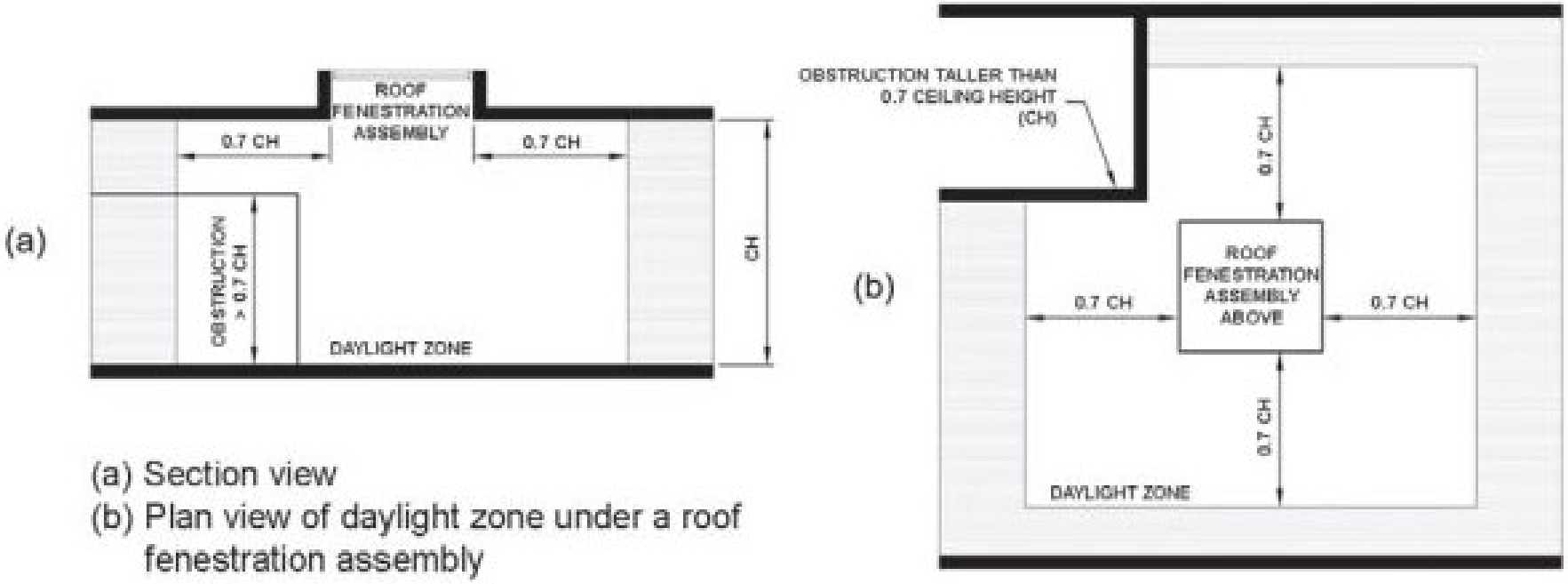

(a) Section view
(b) Plan view of daylight zone under a roof fenestration assembly

FIGURE C405.2.3.3(1)
TOPLIT ZONE

C405.2.4
Specific Application Controls

C405.2.4 Specific App Controls

- **(Occupancy sensor or Time-switch) + Manual control required in:**
  - Display and Accent area
  - Lighting in display cases
  - Supplemental task lighting
  - Lighting equipment for sale or demonstration

- **Sleeping Units**
  - Automatically switch off all permanently installed luminaires & switched receptacles within 20 min. after no occupancy

    Exception: Keycard controlled switches & receptacles

    Patient care space

Image courtesy of Wattstopper

C405.2.4 Specific App Controls

- **Dwelling Units:**
  - Occupant sensor control (C405.2.1) or light-reduction controls (C405.2.2.2)

- **Lighting for Nonvisual Application (Plant, Food Warming)**
  - Time-switch control (C405.2.2.1) independent of other lighting within the space

Image courtesy of DOE

Image courtesy of Quora

C405.2.5
Manual Controls

C405.2.5 Manual Controls

- Occupants must have ready access
- Located where the controlled lights are visible, or shall identify the area served by the lights and indicate their status

Image courtesy of https://nwlightingnetwork.com

C405.2.6
Exterior Lighting Controls

C405.2.6 Exterior Lighting Controls

C405.2.6 Exterior Lighting Control

Façade & Landscape Lighting

Exterior Lighting	Decorative Lighting
C405.2.6.1	C405.2.6.1
	C405.2.6.2
C405.2.6.3	
C405.2.6.4	C405.2.6.4

C405.2.6.1:
Daylight Shutoff

C405.2.6.2:
Decorative Lighting Shutoff

C405.2.6.3:
Lighting Setback

C405.2.6.4:
Time-switch Function

C405.2.6 Exterior Lighting Controls

- **Daylight Shutoff**

- **Decorative Lighting Shutoff**
  - Building façade and landscape lighting shall automatically shutoff ≤ 1 hr after business closing to ≤ 1 hr before opening

- **Lighting Setback**
  - Total wattage reduced by ≥ 30% by switching or dimming during one of the following:
    - From not later than midnight to not earlier than 6 am
    - From ≤ 1 hour after business closing to ≤ 1 hour before opening
    - During any time where activity has not been detected for ≥ 15 min

- **Time-switch Control**
  - Same as interior time-switch

C405.3
Interior Lighting

C405.3 Interior Lighting

- **Methods for determining power allowance (choose one)**
  - Building area method
  - Space by space method w/ additional allowances for special use lighting

  - 2014 NEC 220.12 Exception Requirements
    - Power monitoring system for total general lighting load of building
    - Power monitoring system alarms if load exceeds values in energy code
    - Demand factors specified in 220.42 not applied to general lighting load

C405.3 Interior Lighting

- **The following are excluded from interior load calculation**
  - TV broadcast lighting
  - Emergency lighting that is off during normal operation
  - Exit signs
  - Lighting for occupants with special needs such as visual impairment
  - Casino gaming areas
  - Mirror lighting in dressing rooms
  - Task lighting for medical or dental purposes
  - Display lighting for galleries, museums, and monuments
  - Lighting for theatrical purposes
  - Lighting for photographic processes
  - Lighting integral to equipment installed by manufacturer
  - Task lighting for plant growth
  - Food Warming
  - Lighting equipment for sale
  - Advertising or directional signage

C405.3 Interior Lighting

- **Building Area Method**
  - Floor area for each building type listed in Table C405.3.2(1) times the value in that table for that area
  - Area: All contiguous spaces that accommodate or are associated with a single building area type
  - Where used, each building area type shall be treated as a separate area

C405.3 Interior Lighting

Type of Occupancy	2015 IECC (W/SF)	**2018 IECC (W/SF)**
Automotive facility	0.80	0.71
Convention Center	1.01	0.76
Courthouse	1.01	0.90
Dining: Bar lounge/leisure	1.01	0.90
Dining: cafeteria/fast food	0.90	0.79
Dining: family	0.95	0.78
Dormitory	0.57	**0.61**
Performing Arts Center	1.39	**1.18**

C405.3 Interior Lighting

Type of Occupancy	2015 IECC (W/SF)	2018 IECC (W/SF)
Library	1.19	0.78

- **Example Library: 100,000 SF**
  - 2015 limit: 119,000 W
  - 2018 limit: 78,000 W
  - A Savings of 41,000 W
    - Equivalent to 12 tons of cooling

C405.3 Interior Lighting

- **Space-by-Space Method**
  - Floor area for each space type listed in Table C405.3.2(2) times the value in that table for that space
  - Tradeoffs between spaces are allowed
  - Additional allowance provided for specific lighting functions if using automatically controlled separate from the general lighting and only for the purpose specified. Additional allowances can not be traded

C405.3 Interior Lighting

Type of Occupancy	2015 IECC (W/SF)	2018 IECC (W/SF)
Healthcare facility-exam room	1.66	**1.68**
Healthcare facility-imaging room	1.51	1.06
Healthcare facility-medical supply room	0.74	0.54
Healthcare facility-nursery	0.88	**1.00**
Healthcare facility-nurse's station	0.71	**0.81**
Healthcare facility-operating room	2.48	2.17
Healthcare facility-patient room	0.62	0.62
Healthcare facility-physical therapy room	0.91	0.84

C405.3 Interior Lighting

Additional Allowance for sales area	2018 IECC (W/SF)
Base Allowance	1000 watts
Vehicles, sporting goods, small electronics	0.45
Furniture, clothing, cosmetics, artwork	1.05
Jewelry, crystal, china	1.87
Other	0.45
Allowances based on square foot of sales area for each category	

C405.3 Determining Connected Load

- **Maximum fixture wattage label**
- **Ballast input wattage**
- **Transformer input wattage**
- **Track lighting**
  - IECC: 8W/ft (previously 30 W/ft)
  - AHRAE 90.1: 30 W/ft
  - NEC: 150W/2ft

C405.4
Exterior Lighting

C405.4 Exterior Lighting

- **The following are excluded from exterior load calculation**
  - Lighting approved because of safety considerations
  - Emergency lighting that is off during normal operation
  - Exit signs
  - Specialized signal, directional, and marker associated with transportation
  - Advertising and directional signage
  - Integral to equipment and installed by manufacturer
  - Theatrical purpose lighting
  - Athletic playing areas
  - Temporary lighting
  - Industrial production, material handing, transportation sites, and associated storage areas
  - Theme elements in theme/amusement parks
  - Used to highlight features of art, monuments, and national flag
  - Lighting for water features and swimming pools
  - Lighting controlled within dwelling units complying with R404.1

C405.4 Exterior Lighting

- **Exterior Power Allowance**
  - Sum of the base plus the individual areas that are to be illuminated as specified in Table C405.4.2(2) using the zones found in Table C405.4.2(1)

Zone	2018 IECC Table C405.4.2(1) Description
1	National & State Parks, forest land, rural areas
2	Predominantly residential zoning, neighborhood business district, light industrial with limited night-time use, residential mixed use areas
3	All Other areas
4	High activity commercial in major metropolitan areas designated by the local land use planning authority

C405.4 Exterior Lighting

Exterior Allowance	Zone 1	Zone 2	Zone 3	Zone 4
Base Allowance	350	400	500	900 W
Parking/drives	0.03	0.04	0.06	0.08 W/SF
Walkways <10’ wide	0.5	0.5	0.6	0.7 W/LF
Walkways, other	0.1	0.1	0.11	0.14 W/SF
Landscaping	0.03	0.04	0.04	0.04 W/SF
Entry canopies	0.2	0.25	0.4	0.4 W/SF
Loading docks	0.35	0.35	0.35	0.35 W/SF
Open sales lots	0.2	0.2	0.35	0.5 W/SF

C405.4 Exterior Lighting

Exterior Allowance	Zone 1	Zone 2	Zone 3	Zone 4
Building Façade	0	0.075	0.113	0.15 W/SF
ATM and night depository	135W per site plus 45W per additional ATM			
Inspection station at guarded facility	0.5 W/SF of area			
Drive-up window	200W per drive through			
Parking near 24-hr retail entrance	400W per main entry			

C405.4 Exterior Lighting

Exterior Allowance	Zone 3
ATM and night depository	135W per site plus 45W per additional ATM
Drive-up window	200W per drive through

ASHRAE 90.1 - 2016

ASHRAE 90.1

- Not commonly used due to some additional requirements
  - 8.4.2 Automatic Receptacle Control
  - 8.4.3 Electrical Energy Monitoring

- Generally used if client requests it or for semi-heated spaces as IECC does not have this category (only conditioned or low-energy building)

8.4.2 Automatic Receptacle Control

- At least 50% of all 125V 15, and 20 amp receptacles and at least 25% of branch circuit feeders for modular furniture
  - Private offices, conference rooms, printing/copy rooms, break rooms, classrooms, and individual workstations
- Controlled by:
  - Scheduled control (zones of 1 floor or 5,000 SF, whichever is less)
  - Occupancy sensor
  - Automated control system
- Must be permanently marked to differentiate controlled and non-controlled and distributed uniformly

8.4.2 Automatic Receptacle Control

Image courtesy of Leviton

8.4.3 Electrical Energy Monitoring

- Each of the following must be monitored separately:
  - Total electrical energy
  - HVAC systems
  - Interior lighting
  - Exterior lighting
  - Receptacle circuits
- Individual tenant spaces separately monitored and made available to each tenant
- Recorded every 15 minutes for at least 36 months

Questions?

energycode@sedac.org
800-214-7954